Correct as at 26th April 2026. It may be superseded at any time.

Extract taken from: Border inspection of imported used vehicles > Reference materials > Report on water damaged vehicles

4 Report on water damaged vehicles

Water damage report (PDF)

Version: August 2024

NZ TRANSPORT AGENCY
WAKA KOTAHI

Report on water damaged vehicle

From:

Name of vehicle inspector: _____

Port of inspection: _____ Vessel: _____

Vehicle Make _____ Model: _____

VIN No. | | | | | | | | | | | | | | | | |

Border inspection date: _____

Mark location on vehicle where water damage was identified. Include photographs.

State clearly what evidence there is of water damage to the vehicle.

_____

_____
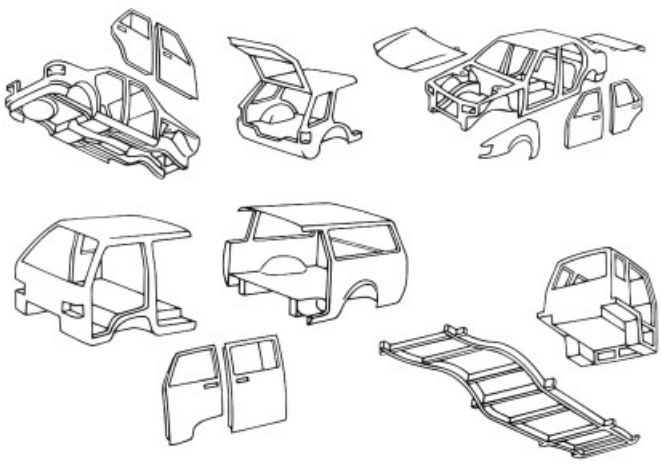
_____