Correct as at 28th June 2026. It may be superseded at any time.

Extract taken from: Light vehicle repair certification > Introduction > Sample certification documents

7 Sample certification documents

Figure 1. LT307 No repair certification required declaration

No Repair Certification Required Declaration – Light Vehicle

Serial Number XXXXXX

Vehicle Details

Make

Model

Chassis

VIN

Colour

Odometer reading

Repair Certifier Statement

I have inspected, in accordance with my appointment as Inspector under *Land Transport Rule: Vehicle Standards Compliance 2002*, the vehicle described in this report.

The vehicle has been inspected by me and I confirm that no *Light Vehicle Repair Record of Certification (LT308)* is required for this vehicle. The damage to the vehicle is cosmetic and I am satisfied that the vehicle can be Entry certified without repair to the vehicle structure.

Repair certifier name and phone number

Repair Certifier's ID

Signature

Date

Vehicle Condition Statement

State clearly why the vehicle does not require repair certification. You must clearly reference and use similar wording to the *VIRM: Light vehicle repair certification – Technical bulletin 4: Threshold for requiring repair certification.*

Please indicate previous repair, corrosion or damage

For audit purposes, please indicate the area(s) where you have carried out assessment if not the entire vehicle.

Photos retained on file: Yes ☐ No ☐

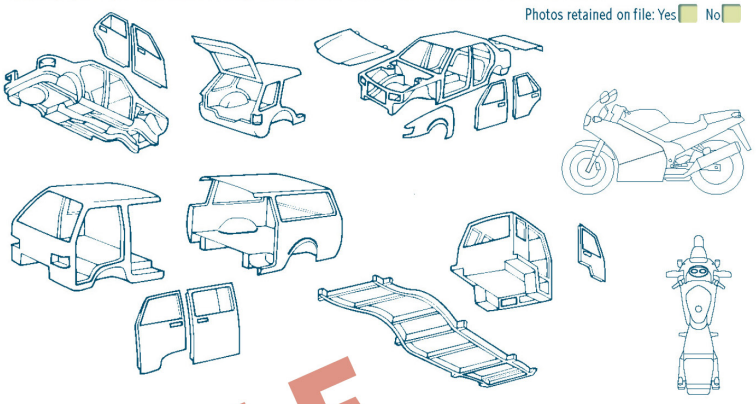

New Zealand Government

Issue Number 1 – Page 1

Repair Certifier Copy

LT307 08/14

No Repair Certification Required Declaration – Light Vehicle

Serial Number XXXXXX

Vehicle Details

Make

Model

Chassis

VIN

Colour

Odometer reading

Repair Certifier Statement

I have inspected, in accordance with my appointment as Inspector under *Land Transport Rule: Vehicle Standards Compliance 2002*, the vehicle described in this report.

The vehicle has been inspected by me and I confirm that no *Light Vehicle Repair Record of Certification (LT308)* is required for this vehicle. The damage to the vehicle is cosmetic and I am satisfied that the vehicle can be Entry certified without repair to the vehicle structure.

Repair certifier name and phone number

Repair Certifier's ID

Signature

Date

Vehicle Condition Statement

State clearly why the vehicle does not require repair certification. You must clearly reference and use similar wording to the *VIRM: Light vehicle repair certification – Technical bulletin 4: Threshold for requiring repair certification.*

Please indicate previous repair, corrosion or damage

For audit purposes, please indicate the area(s) where you have carried out assessment if not the entire vehicle.

Photos retained on file: Yes ☐ No ☐

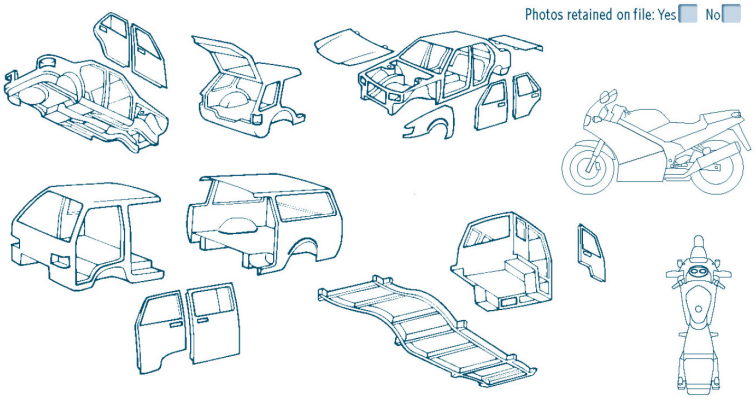

New Zealand Government

Issue Number 1 – Page 2

Customer Copy

LT307 08/14

SAMPLE

Figure 2. LT308 Light vehicle repair record of certification

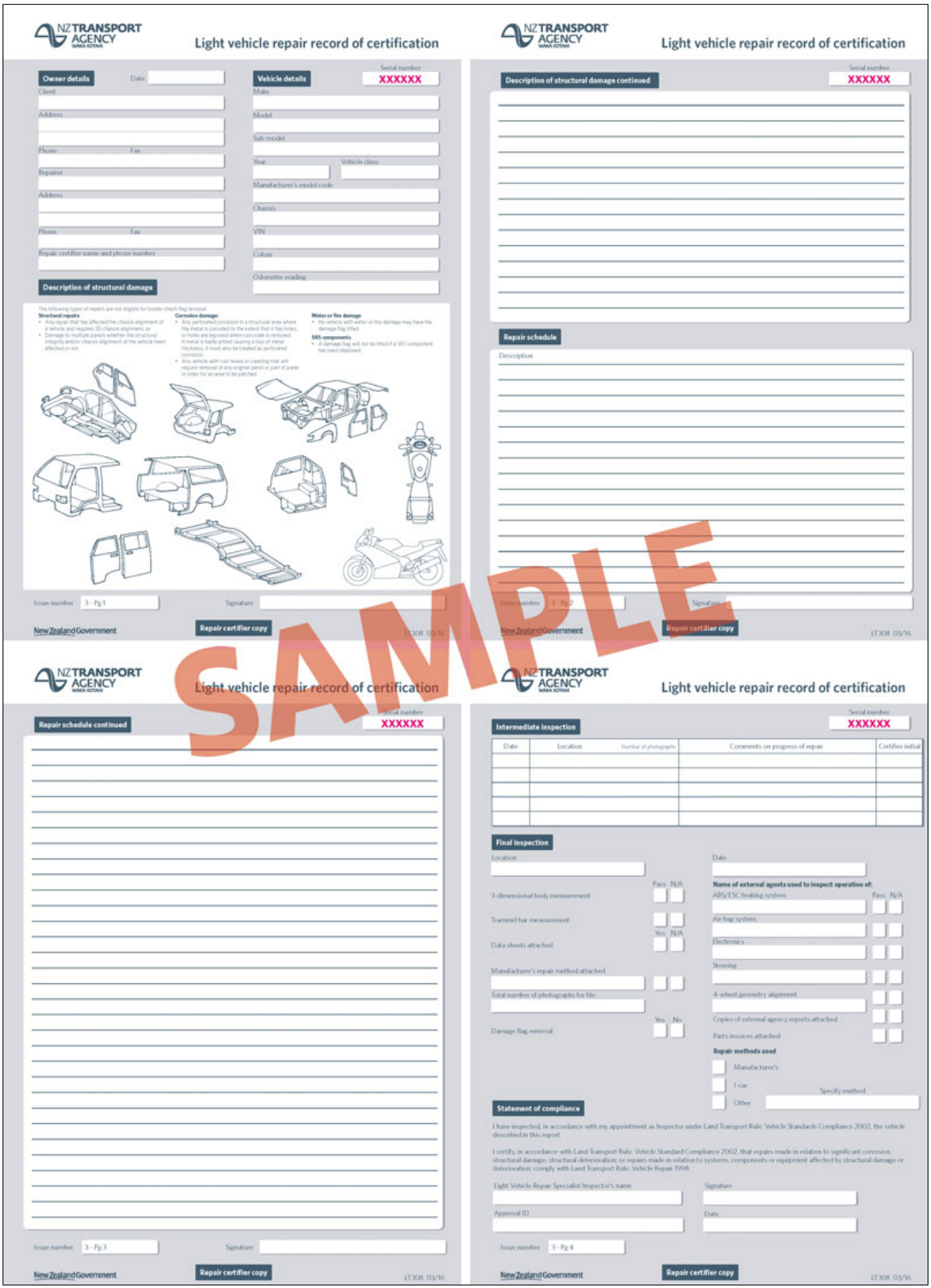

NZ TRANSPORT AGENCY WAKA KOTAHI

Light vehicle repair record of certification

Owner details

Date

Client

Address

Phone Fax

Repairer

Address

Phone Fax

Repair certifier name and phone number

Vehicle details

Serial number XXXXXX

Make

Model

Sub-model

Year Vehicle class

Manufacturer's model code

Chassis

VIN

Colour

Odometer reading

Description of structural damage

The following types of repairs are not eligible for border check flag removal:

Structural repairs

- Any repair that has affected the chassis alignment of a vehicle and requires 3D chassis alignment, or
- Damage to multiple panels whether the structural integrity and/or chassis alignment of the vehicle been affected or not.

Corrosion damage:

- Any perforated corrosion in a structural area where the metal is corroded to the extent that it has holes, or holes are exposed when rust scale is removed. If metal is badly pitted causing a loss of metal thickness, it must also be treated as perforated corrosion.
- Any vehicle with rust heave or swelling that will require removal of any original panel or part of panel in order for an area to be patched.

Water or fire damage

- No vehicle with water or fire damage may have the damage flag lifted.

SRS components

- A damage flag will not be lifted if a SRS component has been deployed.

Issue number 3 - Pg 1 Signature

New Zealand Government Repair certifier copy LT308 03/16

NZ TRANSPORT AGENCY WAKA KOTAHI

Light vehicle repair record of certification

Serial number XXXXXX

Description of structural damage continued

Repair schedule

Description

Issue number 3 - Pg 2 Signature

New Zealand Government Repair certifier copy LT308 03/16

SAMPLE

NZ TRANSPORT AGENCY WAKA KOTAHI

Light vehicle repair record of certification

Serial number XXXXXX

Repair schedule continued

Issue number 3 - Pg 3 Signature

New Zealand Government Repair certifier copy LT308 03/16

NZ TRANSPORT AGENCY WAKA KOTAHI

Light vehicle repair record of certification

Serial number XXXXXX

Intermediate inspection

Date	Location	Number of photographs	Comments on progress of repair	Certifier initial

Final inspection

Location

Date

	Pass	N/A
3-dimensional body measurement		
Trammel bar measurement		

	Yes	N/A
Data sheets attached		
Manufacturer's repair method attached		
Total number of photographs for file		

	Yes	No
Damage flag removal		

Name of external agents used to inspect operation of:

	Pass	N/A
ABS/ESC braking system		
Air bag system		
Electronics		
Steering		
4-wheel geometry alignment		
Copies of external agency reports attached		
Parts invoices attached		

Repair methods used

- Manufacturer's
- I-car
- Other — Specify method

Statement of compliance

I have inspected, in accordance with my appointment as Inspector under Land Transport Rule: Vehicle Standards Compliance 2002, the vehicle described in this report.

I certify, in accordance with Land Transport Rule: Vehicle Standard Compliance 2002, that repairs made in relation to significant corrosion, structural damage, structural deterioration; or repairs made in relation to systems, components or equipment affected by structural damage or deterioration; comply with Land Transport Rule: Vehicle Repair 1998.

Light Vehicle Repair Specialist Inspector's name Signature

Approval ID Date

Issue number 3 - Pg 4

New Zealand Government Repair certifier copy LT308 03/16

Page amended **1 September 2016** (see **amendment details**).